NR ELEMENTU	NUMER CZĘŚCI	OPIS	ILOŚĆ
1	uchyt osi X		2

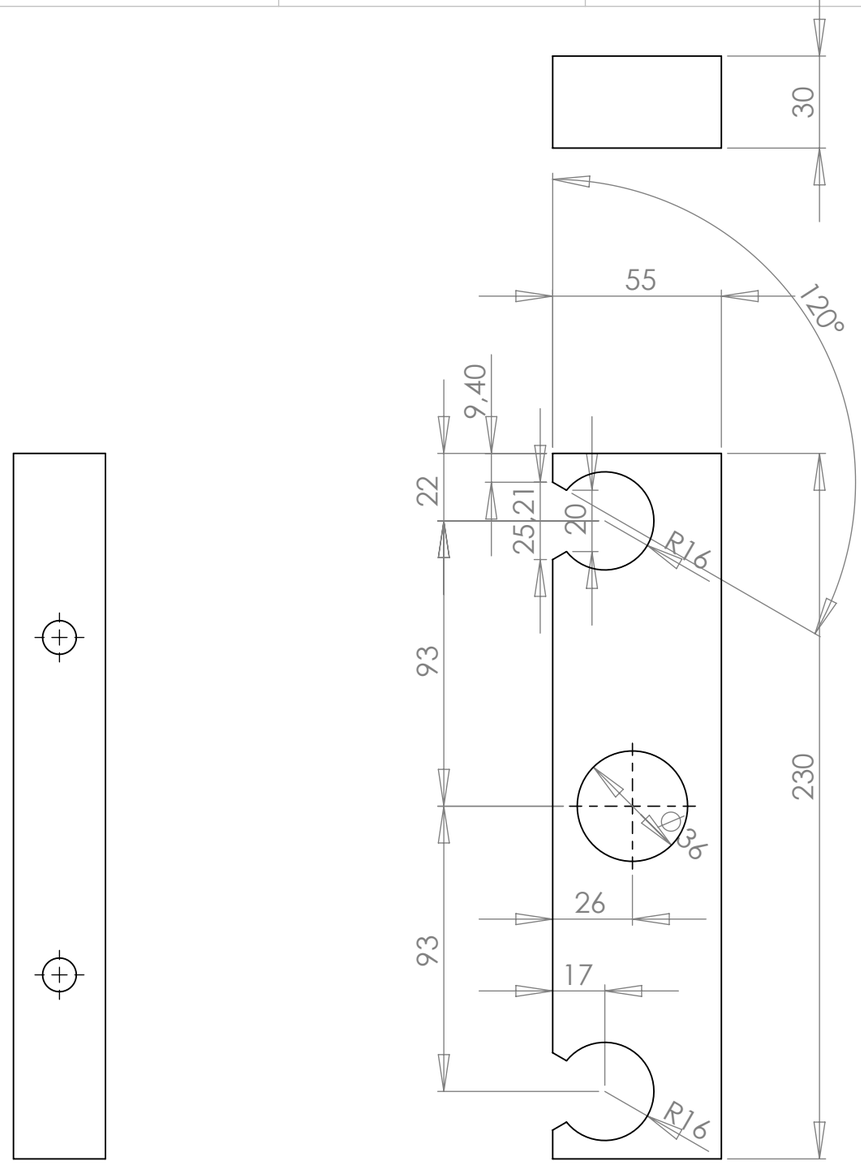

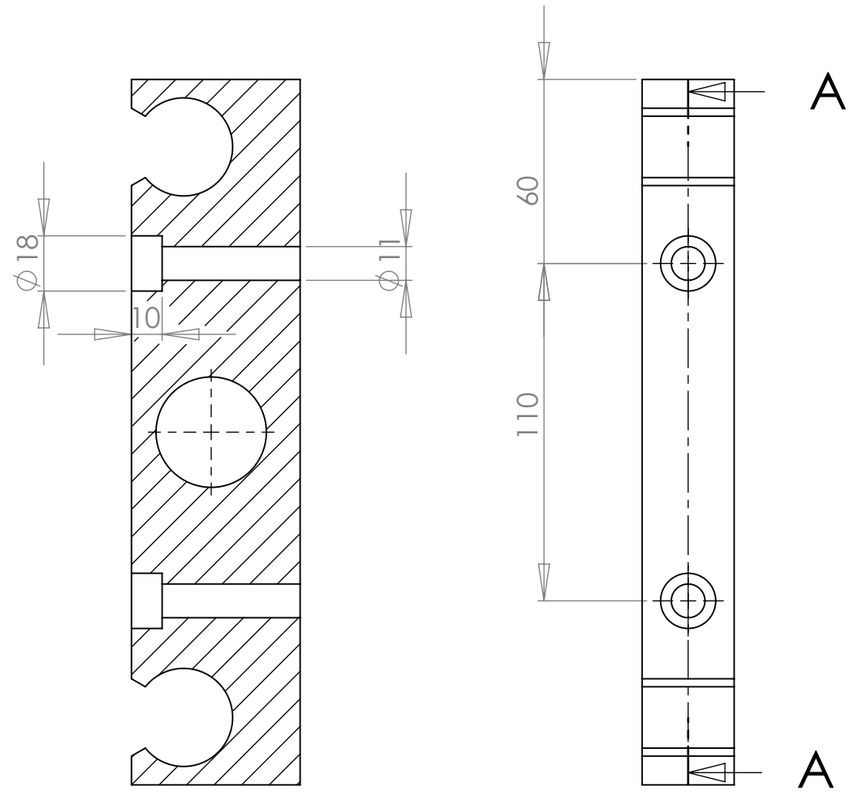

PRZEKRÓJ A-A

UNLESS OTHERWISE SPECIFIED: DIMENSIONS ARE IN MILLIMETERS SURFACE FINISH: TOLERANCES: LINEAR: ANGULAR:	FINISH:			DEBUR AND BREAK SHARP EDGES	DO NOT SCALE DRAWING	REVISION
	NAME	SIGNATURE	DATE		TITLE:	
DRAWN						
CHK'D						
APPV'D						
MFG						
Q.A				MATERIAL:	DWG NO. uchyt osi X	A3
				WEIGHT:	SCALE:1:2	SHEET 1 OF 1